RoHS

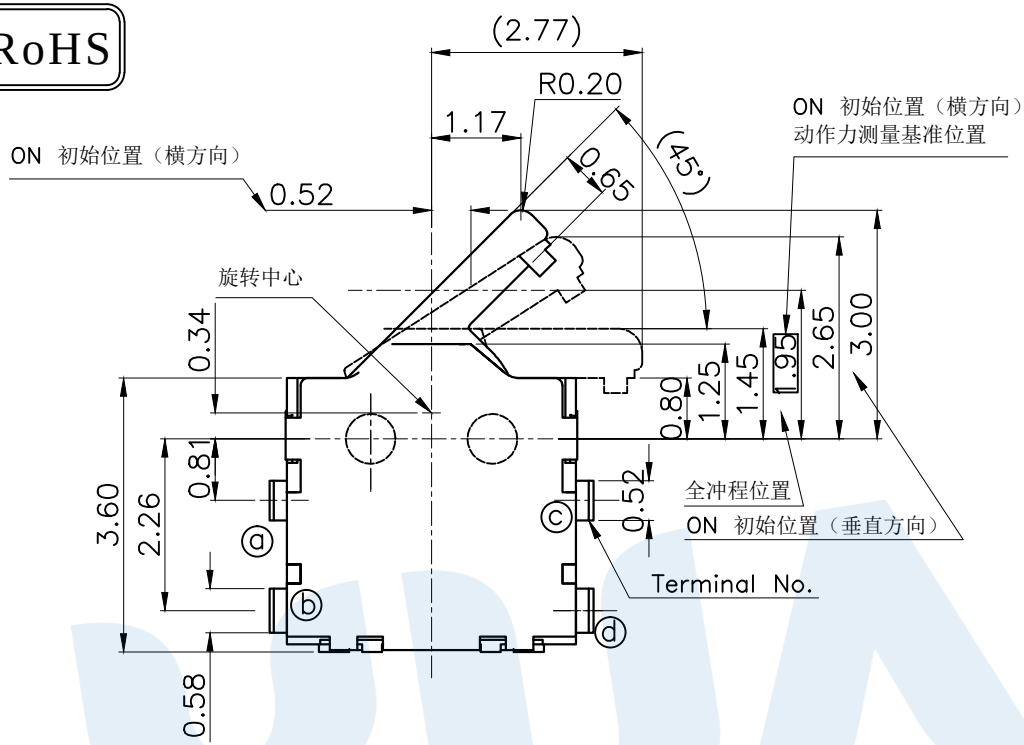

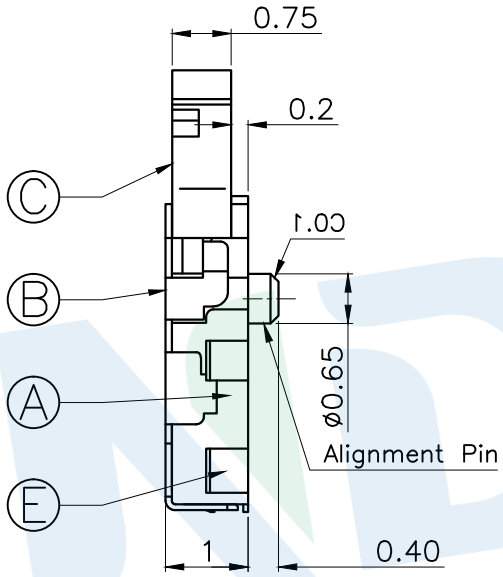

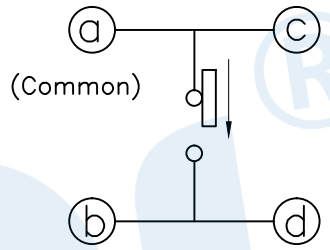

Circuit Diagram

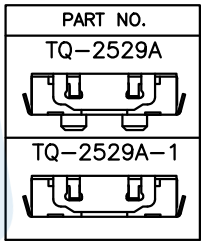

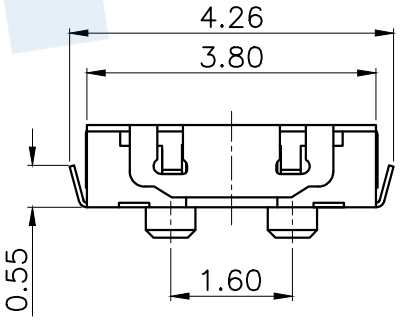

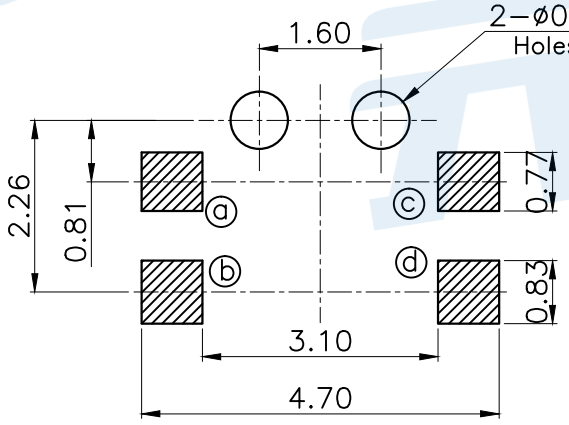

PCB Layout(Pattern side)

Technical Parameters

1.Rated current: DC 12V 50mA

2.Operating force:20±10gf

3.Mechanical life: 100,000 times

NO.	Name	Number	Qty	Materil	Remarks
Ⓔ	Terminal		4	Phosphor bronze	Silvering
Ⓓ	Contact Spring		1	Phosphor bronze	Silvering
Ⓒ	Button		1	PA46	Black
Ⓑ	Cover		1	SUS	Natural
Ⓐ	Base		1	PA46	Black

YUANDI® 元迪 Yuandi Electronics Co,Ltd

				angle	±2°	design		date		name	DETECTION SWITCH
				10~30	±0.30	Review		date			
				5~10	±0.20	Approved		date		model	TQ-2529A-□
				~ 5	±0.10	Drawing number:					
			modify	Review	Approved	Tolerance not specified	Proportion	1:1	unit	mm	gape number	A4